OPTIMUM®
MASCHINEN - GERMANY

Instruction manual

Version 1.0

Preface

Dimensions - Technical data

Ersatzteilzeichnung - Spare parts drawing

Arbor press

PD3 3359030

1 Preface

Dear customer, Thank you very much for purchasing this product made by OPTIMUM.

Please note. The arbor press is not a machine in the sense of the Machinery Directive. This product is powered only by the human hand. An declaration of conformity of the arbor press according to valid European directives is not possible. Further information on this can be found on the website of the European Commission, Machinery Ordinance.

https://eur-lex.europa.eu/legal-content/EN/TXT/?uri=CELEX%3A32023R1230

Nevertheless, as a user, you must observe these operating instructions to ensure safe commissioning and operation!

Damages caused by the disregard of this user manual are not subject to warranty. The dealer will not accept liability for any resulting defects or problems.

1.1 Intended use

The arbor press is suitable for pressing or ejection operations. Applying stronger forces by using additional levers is not allowed.

If the arbor press is used in any way other than described above, or modified without the approval of Maschinen Germany GmbH, then the arbor press is being used improperly.

We will not be held liable for any damages resulting from any operation which is not in accordance with the intended use.

We expressly point out that the guarantee will expire, if any constructive, technical or procedural changes are not performed by the company Optimum Maschinen Germany GmbH.

2 Dimensions - Technical data

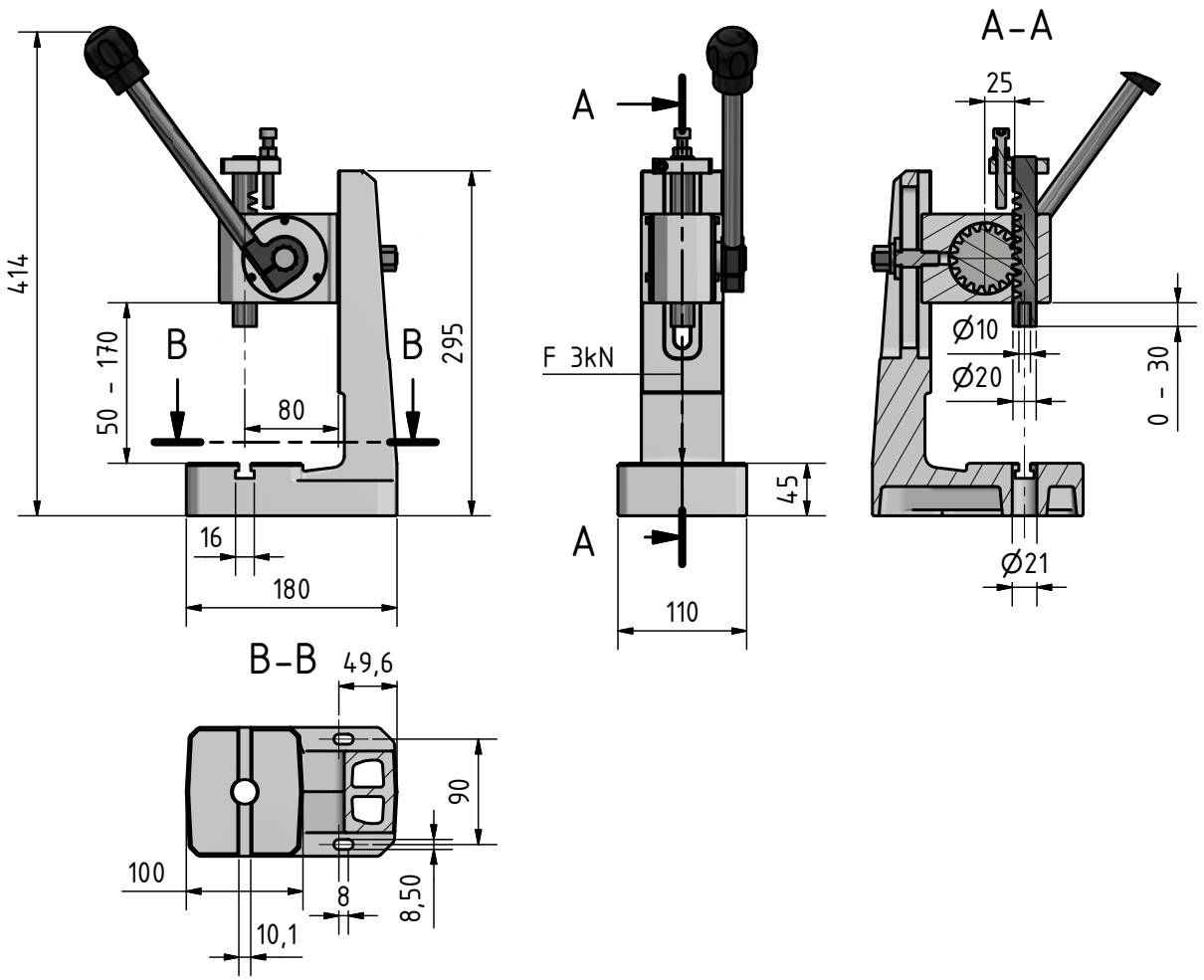

Maximum force	3 kN
Distance between press frame and press plunger	80mm
Press head travel range	50 - 170mm
Press plunger travel	30mm

PD3_GB_2.fm

3 Ersatzteilzeichnung - Spare parts drawing

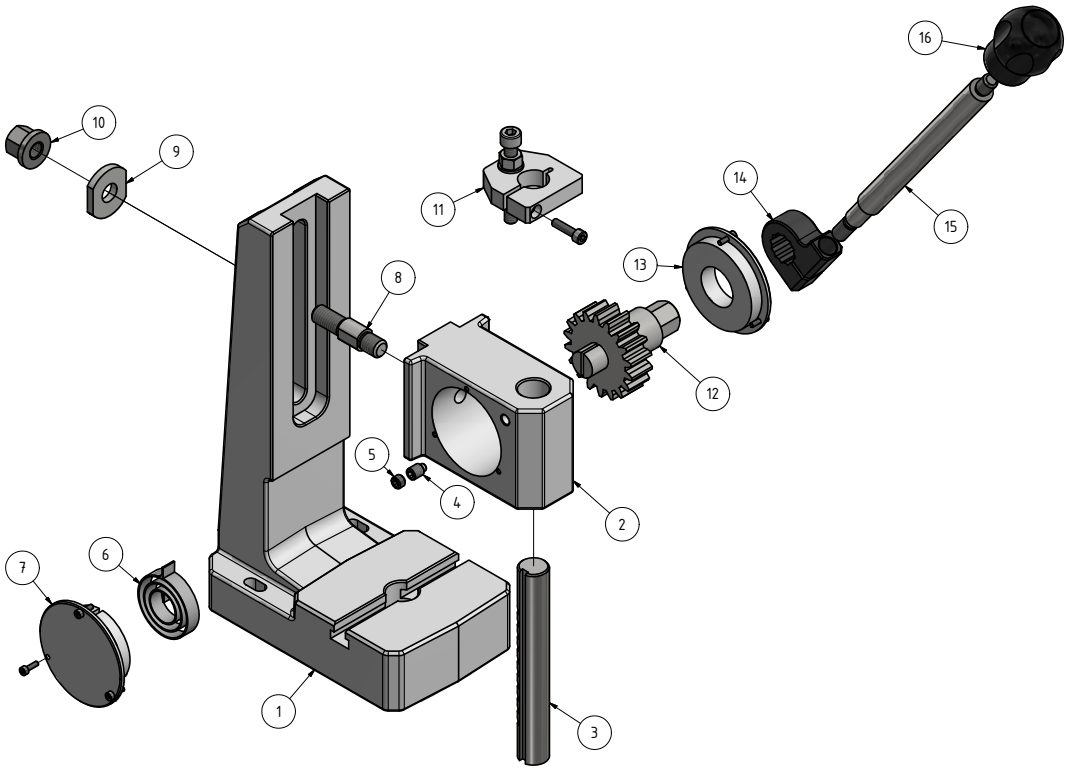

PD3 - Handhebelpresse - Hand lever press					
Pos.	Bezeichnung	Description	Menge Qty.	Grösse Size	Artikelnummer Item no.
1	Pressenständer	Press stand	1		0335903001
2	Pressenkopf	Press head	1		0335903002
3	Pressstempel	Press plunger	1	Ø 20mm	0335903003
4	Verdrehsicherung	Anti-twist device	1	M8	0335903004
5	Stiftschraube	Set screw	1	GB/T 77 M8x6	
6	Rückholfeder	Return spring	1		0335903006
7	Abdeckung Spiralfeder	Spiral spring cover	1		0335903007
8	Führungsbolzen	Guide bolt	1		0335903008
9	Führungsscheibe	Guide washer	1		0335903009
10	Sechskantmutter mit Bund	Hexagon nut with collar	1	DIN 6331 M12	
11	Endanschlagplatte	Limit stop plate	1		0335903011
12	Ritzel	Gear pinion	1		0335903012
13	Abdeckung	Cover	1		0335903013
14	Hebelanschluss	Lever connection	1		0335903014
15	Hebel	Lever	1		0335903015
16	Hebelknopf	Lever knob	1		0335903016

PD3_parts.fm